Countum Group
SATAM
Metering Solutions

Field Batch Controller
EQUALIS S
Depot version
Installation Manual

U517478 – e – Revision 2 – 18/11/2013

This document contains 28 pages, including the front page.

This document is the property of SATAM.

It may not be distributed to third parties without prior authorization.

SATAM reserves the right to modify this document without prior notification.

Complies with the current European ATEX Directive.

SATAM
Headquarters
Paris Nord II, 47, allée des Impressionnistes
BP 85012 Villepinte, 95931 Roissy CDG Cedex- France
Tel. : +33 (0)1 48 63 02 11
Fax : +33 (0)1 49 38 41 01
Email : info@satam.eu
SAS au capital de 6 037 000 €, RCS Bobigny B 495 233 124
N°TVA : FR 48 495 233 124, SIRET 495 233 124 000 17

Production facility
Avenue de Verdun, CS60129
14700 Falaise, France
Tel. : +33 (0)2 31 41 41 41
Fax : +33 (0)2 31 40 75 61

Summary

1. EQUALIS S Overview

1.1. Description

The EQUALIS S Field Batch Controller depot version is an intelligent electronic calculator/indicator, controlled by several embedded microprocessors, designed for efficient management of fluid measurement. It carries out the calculation, display and management functions, essential to product loading or unloading.

EQUALIS is designed to be used in an explosive atmosphere, with different protection modes, in accordance with directive ATEX 94/9/CE.

It is designed to ensure the data backup of the current deliveries in the event of a power failure. This data is restored as soon as the power supply is restored.

The EQUALIS user interface includes a 240 x 128 pixel backlit graphic display, a 20-key keyboard and Stop and Start buttons.

The electronic indicator S EQUALIS depot version consists of a housing composed of two elements. It is located at the loading point. It consists of two boxes:
- The Calculator Module (CM module),
- The Hydraulic Module (HM module) for the output control.

The electronic indicator is supplied with 230VAC or 24VDC (optional version, not MID). It is equipped to communicate with external supervision systems.

1.2. Configurations and options

1.2.1 Standard depot version: Compact module

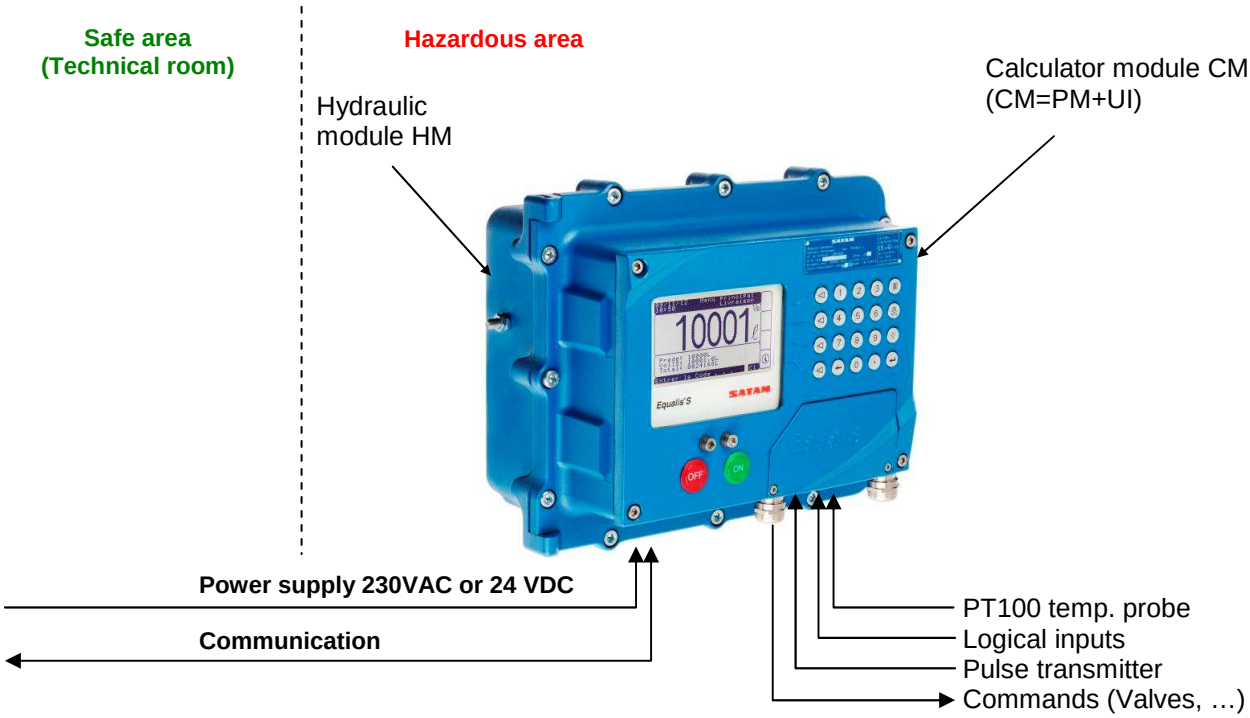

This standard configuration is designed for bottom loading application.

1.2.2 Other configuration: user interface separated from the calculator module.

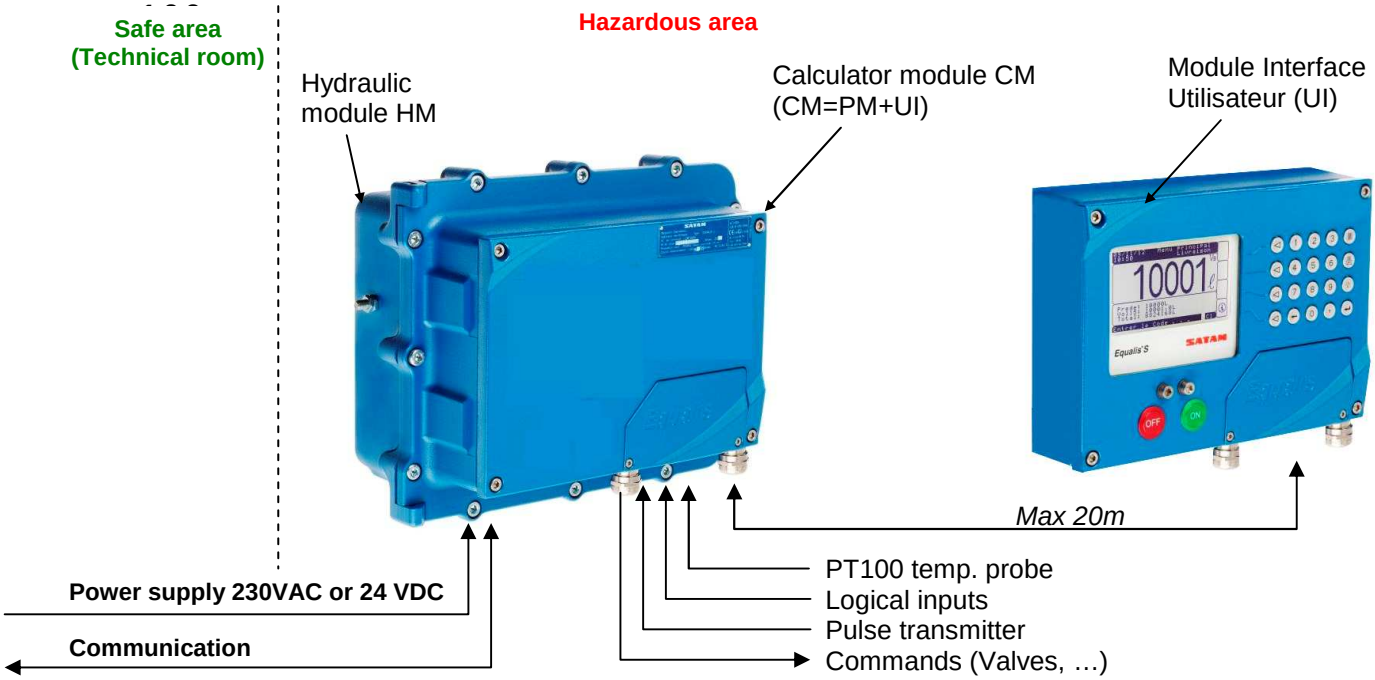

This variant do keep the same features. It is particularly suitable to have an adjustable user interface, such as top loading configuration.

1.2.4 Gantry Configuration

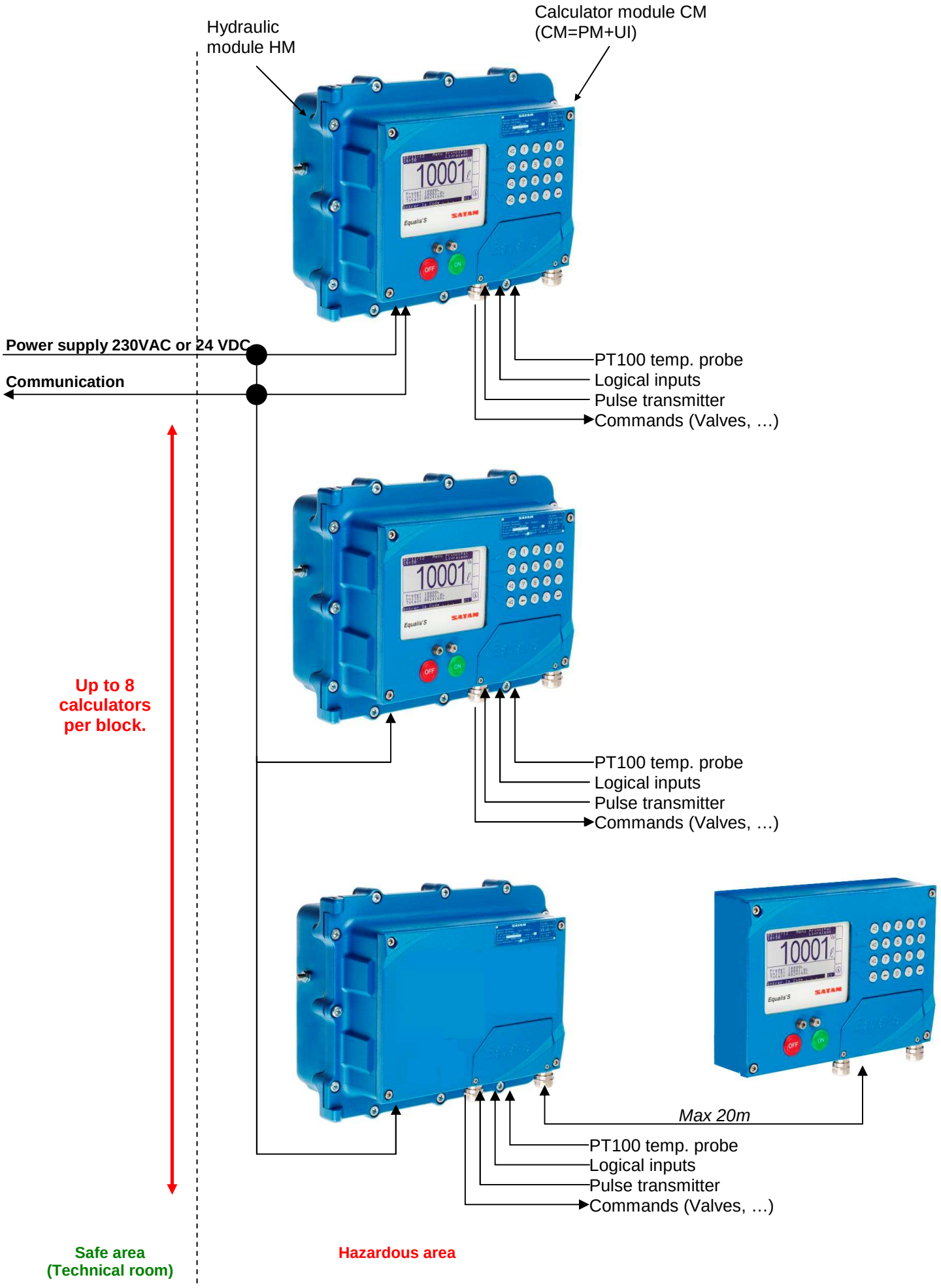

1.3. Main features

The main features of the EQUALIS S flow computer are the following:

Graphic display: Any information necessary required to use the EQUALIS S is displayed on a single screen, in a way that is user-friendly and interactive.

Dust and water resistant: EQUALIS has been developed and manufactured in such a way as to make it resistant to the risks of everyday use and the elements.

Adjustable meter curve: The EQUALIS has a parameter used to correct the curve by reducing the counter to 0 ‰ measurement error at operation flow rate. It also provides the possibility to linearize the curve by using an error correction parameter in 6 sectors.

Hard disk memory: The transactions as well as the system's configuration and calibration parameters are backed-up in a secure database. The capacity of this memory allows to save up to 50 000 transactions.
EQUALIS S also allows consulting and reprinting transactions which are stored in this database. The metrological data featured on this ticket is recognised by legal metrology authorities.

Dual channels for pulses: EQUALIS S may be connected to 1 or 2 pulse transmitters. Where 2 pulse transmitters are connected, EQUALIS S displays the total volume from these two 2 counters.
Systematically for this (these) transmitter(s), the EQUALIS S counts, stores and compares the two pulse channels for each transmitter with a phase shift of 90°. If any disparity is detected between their 2 respective pulse trains, the delivery is stopped, thus also preventing loss of product due to a defective transmitter.

1.4. Certificates and agreements

Legal metrology:

MID Directive 2004/22/EC: Evaluation certificate N° LNE-25874.
Do comply with international recommendation OIML R117-1 edition 2007.

ATEX / IECEx explosive atmosphere:

Description	EC type examination certificate	Protection mode
Compact Module CM / HM	LCIE 13 ATEX 3077X IECEx LCIE 13.0049X	II 2(1) 1 G Ex d [ia Ga] ia IIB T4 Gb Ga *CM box: intrinsically safe, zone 0.* *HM box: flameproof, zone1.*
User Interface alone : UI	LCIE 06 ATEX 6061X	II 1 G Ex ia IIB T4 Ga *Intrinsically safe protection mode, zone 0.*
Hydraulic module alone : HM	LCIE 13 ATEX 3077X IECEx LCIE 13.0049X	II 2(1) G Ex d [ia Ga] IIB T4 Gb *Flameproof protection mode, zone 1.*

1.5. Main functions available

Apart from liquid measurement functions, EQUALIS S has the following functions:

➔ **Predetermination:** EQUALIS S may be used with or without predetermination. This may be up to 999,999 litres. It may be programmed from the user interface or may be determined by a depot management system in communication with EQUALIS S.

➔ **Management of the authorisation valve:** low flow rate at the beginning and end of delivery. Acceleration to high flow rate may be programmed from 0 to 99 litres.

➔ **Additive control:** EQUALIS can control up to 8 different additives per loading arm.

➔ **Pulse copy:** For each calculation assembly, EQUALIS S can generate two pulse trains, corresponding to the volume delivered. The pulse weight of this signal may be calibrated. This pulse copy is recognised in our EQUALIS S metrological certification.

➔ **RS232 / RS485 Communication:** EQUALIS S has a configurable RS232 / RS485 link, which may be used to manage an additive injection blocks or an electronic sealing device. This link is also approved in our evaluation certificate.

➔ **Monitoring of the grounding device:** EQUALIS monitors the status of the grounding device. The delivery is stopped if the vehicle is no longer grounded.

➔ **Monitoring of the anti-overflow sensor:** In case of overflow, the delivery is immediately stopped.

➔ **Computer and/or supervision connection:** The EQUALIS S can be connected to a computing / supervision system. To do this, the calculator EQUALIS S has the following connections: Ethernet, USB, RS485, RS232

➔ **Temperature compensation:** The EQUALIS S ensures the conversion of the volume at 15 °C approved under the type examination certificate. The EQUALIS continuously measures the temperature of the product during the delivery via a temperature probe PT100 and calculates at any time the T° compensated volume on the basis of standardized conversion table. Compensation is approved for temperatures of products between -40 ° C and 80 °C for tables 54A, B, C and D.

➔ **Ticket printing:** Both delivery slips and invoices may be printed automatically or on demand. Equally, previous transactions may be reprinted from the TM memory. The metrological data featured on this slip is recognised by legal metrology authorities.

1.6. Technical specifications

Boxes: hydraulic module and associated calculator module

- High : 278 mm
- Width : 350 mm
- Depth : 192 mm
- Weight : 15 kg

Per configuration:

Calculator module, or remote user interface

- High : 216 mm
- Width : 285 mm
- Depth : 71 mm
- Weight : 5 kg

Hydraulic module HM

- High : 278 mm
- Width : 350 mm
- Depth : 121 mm
- Weight : 10 kg

Graphic display:

- Type : LCD, 240 X 128 pixels Dimensions: 113x64mm
- Delivery volume : 25,4mm
- Backlighting : LED; may be de-activated via keyboard

Keyboard:

- Type : Vandal-proof, IP67 protection
- Keys : 20 keys Ø12mm spaced 20mm apart centre-to-centre

Power supply:

- Type : Sector 230 VAC / 110 VAC. Optional : 24 VDC (Non MID version)
-

Communication ports:

- Serial ports : RS232, RS485
- USB port
- Ethernet port

Logical inputs:

- Type : Intrinsic safety
- Number of inputs : 15
- Max. voltage : -30Vdc to +35Vdc
- Current consumed with active input : 50µA

Output:

- Type : Relay
- Number of outputs : 10 (Optional: 20, with HM2 additional board)
- Max. direct voltage : 250 VAC, 24VDC
- Max. current : 6 A

- Type : Optically isolated, open manifold
- Number of outputs : 3
- Max. direct voltage : 40VDC
- Max. current : 1A
- Recommended voltage : Standard +12 VDC, max. 24VDC

2. Additional Equipments which may be used with EQUALIS S

The EQUALIS S design is fully comprehensive, and it requires very little auxiliary equipment to ensure correct implementation of all its functions. The following devices may be added to the EQUALIS:

2.1. Pulse transmitter AC30

EQUALIS S can be used with several different types of pulse transmitters, and in particular with SATAM AC30 – reference 516038.

2.1.1 AC30 transmitter, ref. 516038

The pulse transmitter is fitted to the meter shaft and supplies a dual pulse train, which allows EQUALIS to measure the volume delivered and to check delivery.

It has the following features:

- Pulse/rev : 20
- Max. frequency : 2 KHz
- Power supply : +5VDC
- Channel : 2 meter channels with a phase shift of 90°

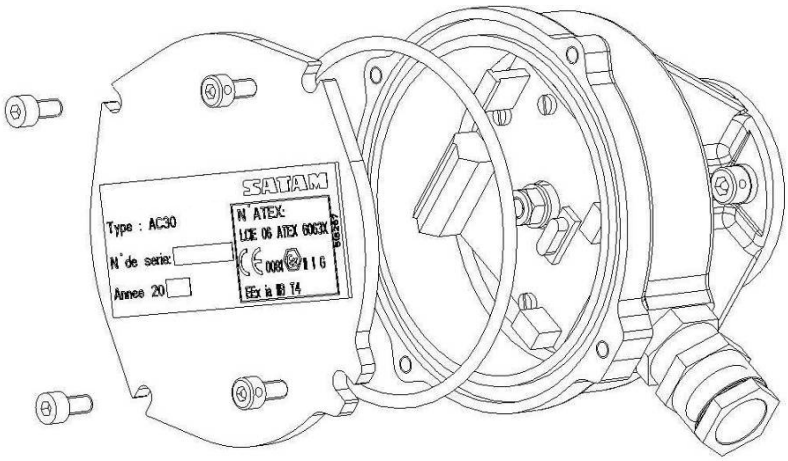

Adaptor – Rotating seal AC30 516209

When the AC30 transmitter is used on a type 80, 150 or 250 m3/h meter, fitting it will require an adaptor – rotating seal.

Implementation : AC30 + Adaptor

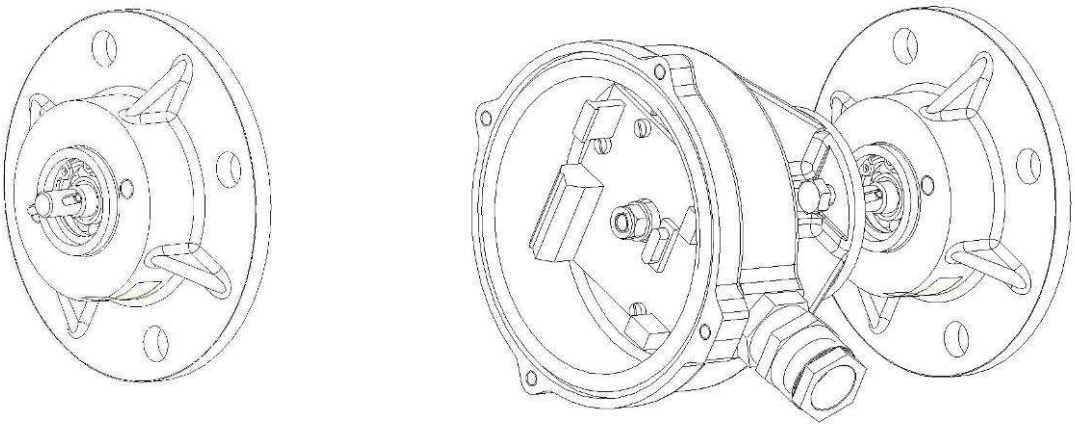

2.1.2 Wiring of the AC30 transmitter - ref. 516038

Wiring diagram of the AC30 transmitter board:

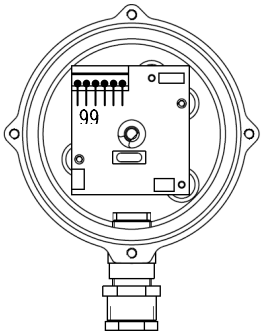

N° broche émetteur	Nom des broches	Couleur fil suivant type câble	N° broche (Rubis, saphir)	N° broche PM Equalis
1	+5V	1- rouge ou rose 2- rouge paire 1	J1-6	J2-1
2	Voie 1	1- jaune 2- rouge paire 2	J1-7	J2-3
3	Voie 2	1- blanc 2- blanc paire 2	J1-8	J2-4
4	MAG SW	1- vert 2- rouge paire 3	J1-10	non connecté
5	Présence Emetteur	1- bleu 2- blanc paire 3	J1-9	J2-6
6	GND / Masse	1- noir ou gris 2- blanc paire 1	J1-11	J2-2

Recommended cable type: IS Instrumentation cable type 03 IP 05 EG SF
- 3 pairs
- 0.5mm² flexible multi-wires
- Aluminium screen or braid (80%)
- Not reinforced

Cable gland connection: cable gland reference: 515934 PG11 for cable Ø 8-10 mm

2.1.3 Mechanical characteristics:

5 pins (channel A, channel B, +5VDC, GND, presence)

Nmax :	1200 rpm
Ambient T° :	-20 / +55°C
Protection:	IP65
MTBF:	2.10^9 rotations

2.1.4 Electrical characteristics:

Power supply:	5V +/-10%
Frequency:	2 kHz max
Iout :	5mA max
Impedance:	1kΩ
Consumption:	40mA max

Number of channels:	2 ways TTL quadrature output
Number of pulses:	20 pulses/rev

2.1.5 ATEX Certificate:

LCIE 06 ATEX 6063X

ATEX Intrinsically safe characteristics of the 5V inputs of the AC30 transmitter:

$U_i \leq 10$ V

$I_i \leq 450$ mA

$P_i \leq 1.2$ W

$C_i \leq 13.4$ µF

$L_i \approx 0$ mH

2.1.6 Overall dimensions:

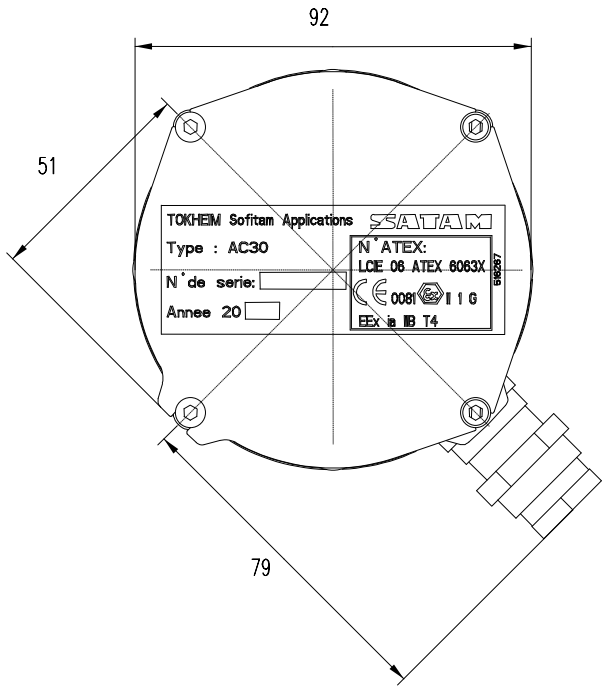

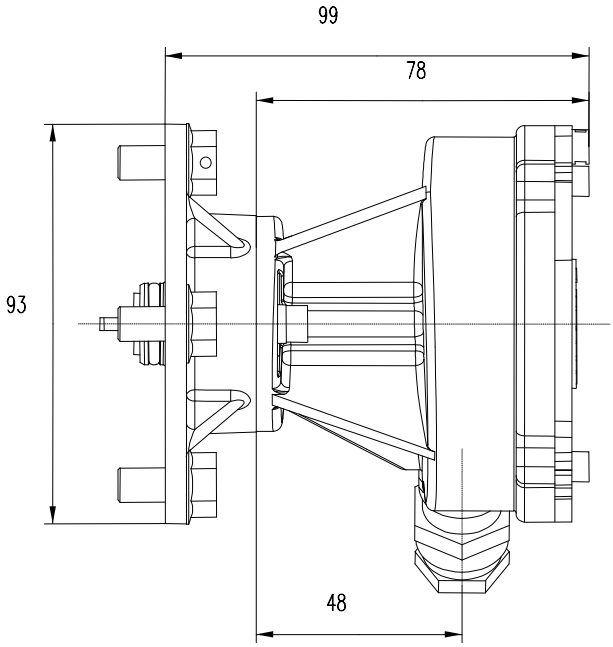

2.2. Printer ref. 512423

The printer used is an EPSON TMU-295 ticket printer.
It has the following characteristics:

- Power supply : +24VDC ±10%
- No. columns : 35/42
- Interface : RS232C
- Print speed : up to 88 characters per second
- Memory : 4K0-bytes
- Ribbon : ref. EPSON ERC-27

To connect this printer to the mains supply, an adaptor must be used, (ref. 514567).

2.3. PT110 temperature probe, ref. 515723

Enables the volume delivered at the reference temperature to be calculated.
Several temperature probes are available (515723 / 515723-10 / 515723-20), with different ATEX protection modes (intrinsically safe, flameproof).

3. INSTALLATION

The following points must be taken into account when installing EQUALIS S.

3.1. General considerations

EQUALIS S must be installed under the following conditions:

- The product must not be energized.
- There must be no power supplied to any EQUALIS equipment.

3.2. Mechanical installation

- The hydraulic and calculator modules should preferably be installed where they are best protected from the external elements.
- The display on the EQUALIS user interface must be installed in a location out of direct sunlight, to prevent deterioration.
- The temperature in which EQUALIS is used must not exceed +55℃ for flow computer modules.
- All cables fitted to EQUALIS must be installed using cable glands for shielded cables, with IP67 protection rating. Any unused cable glands must be sealed with blanking plugs.
- The EQUALIS user interface must be installed in a location which is easily accessible to both the operator and the maintenance personnel and where the display can be easily read.
- Installation must satisfy local requirements for installation and maintenance of electronic equipment in explosive atmospheres.
- The modules which make up the EQUALIS flow computer must be attached in accordance with the following diagrams.
- Excessive tightening of nuts bolts and screws may damage the mounting points.

3.3. Overall dimensions

3.3.1 Hydraulic module HM and calculation module CM assembly:

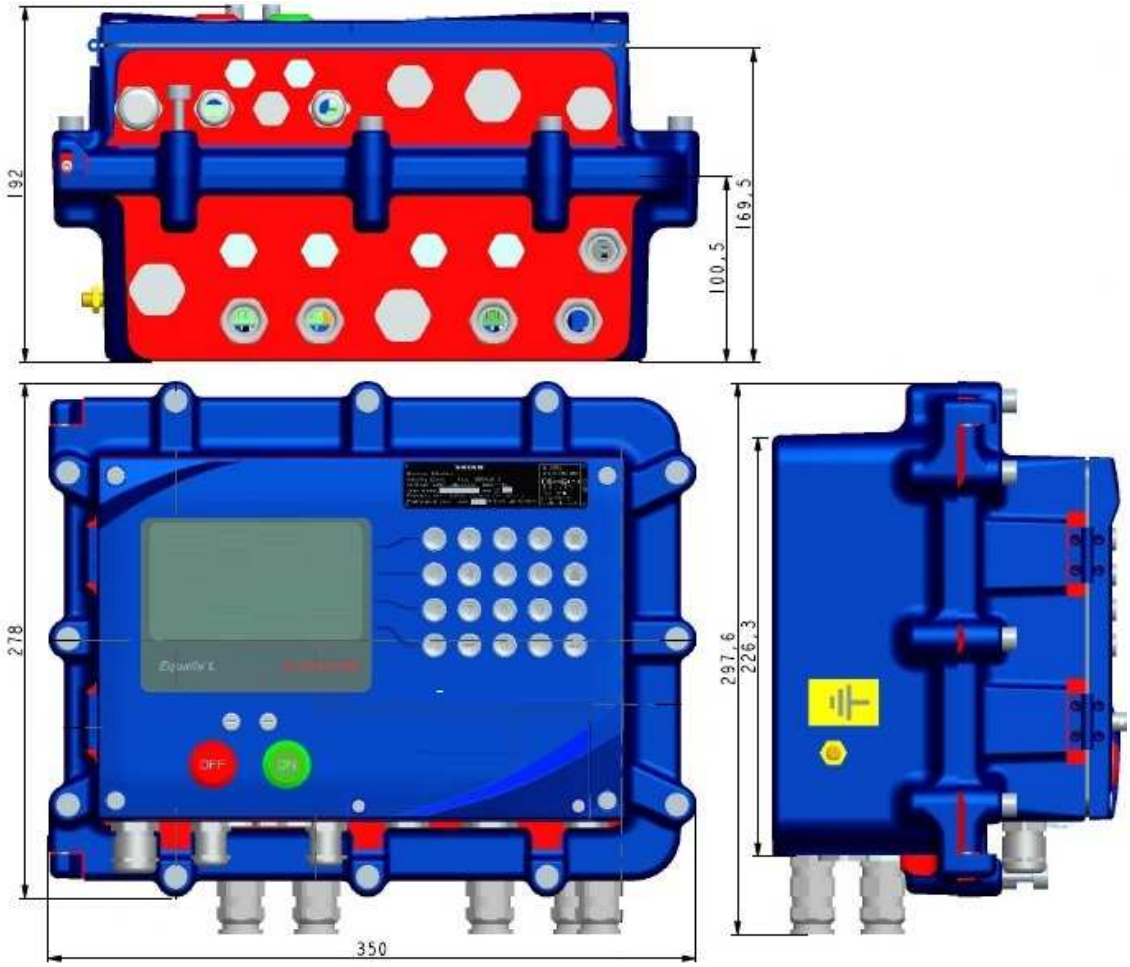

Attachment method:
Hydraulic Module:

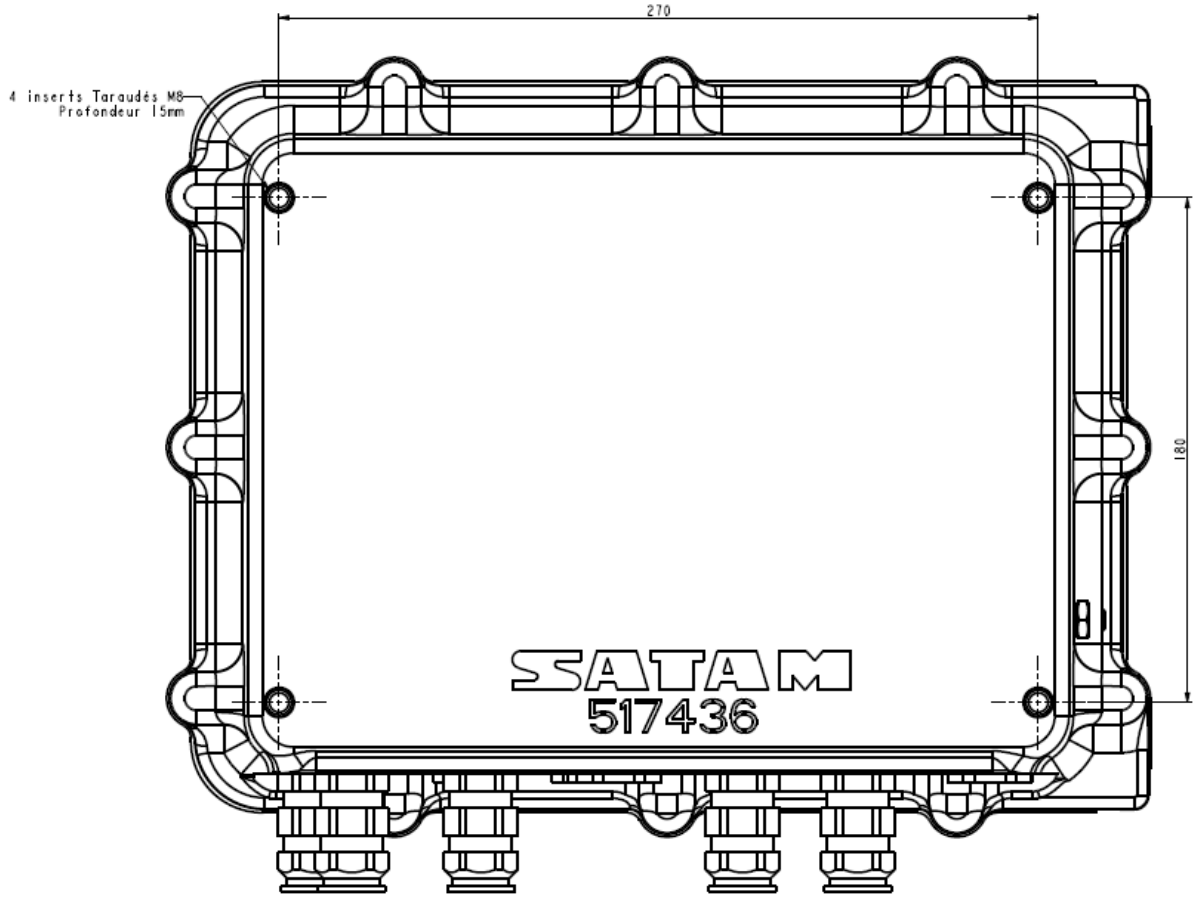

Note: These dimensions are the some on the blind version

3.3.2 Calculator Module CM or User Interface Module:

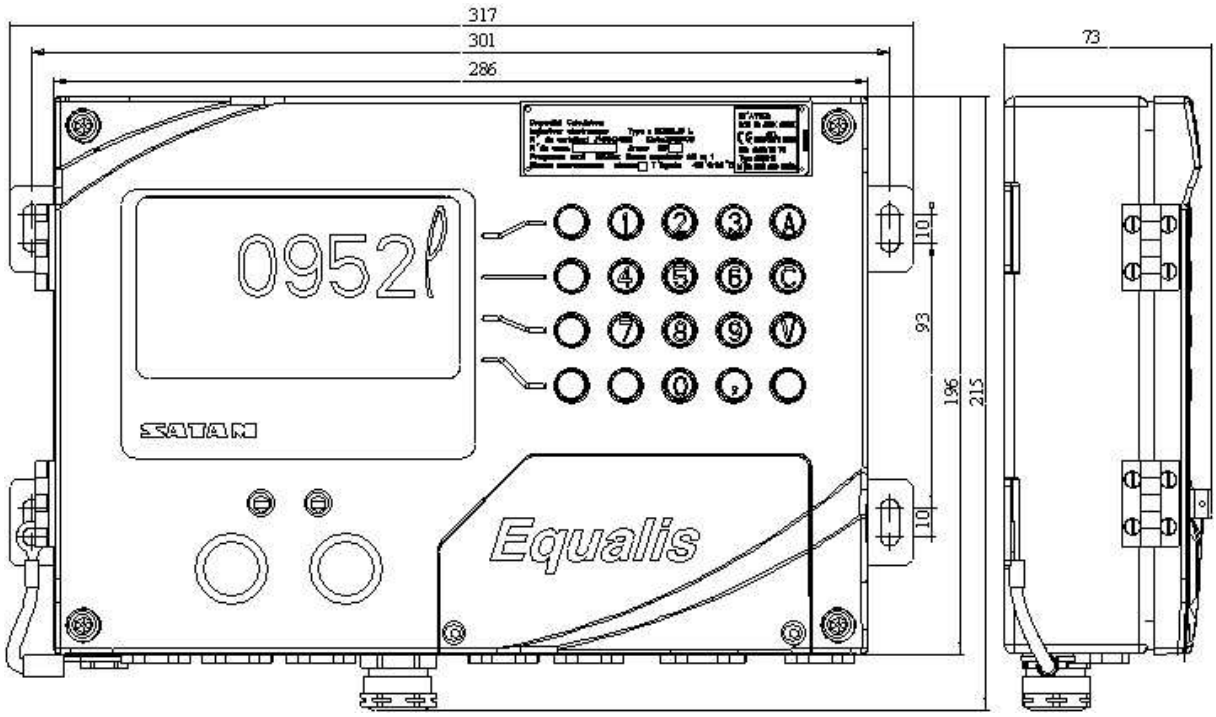

3.4. Electrical installation

3.4.1 Cables for Hydraulic Module HM and CM Module

CG: Cable Gland

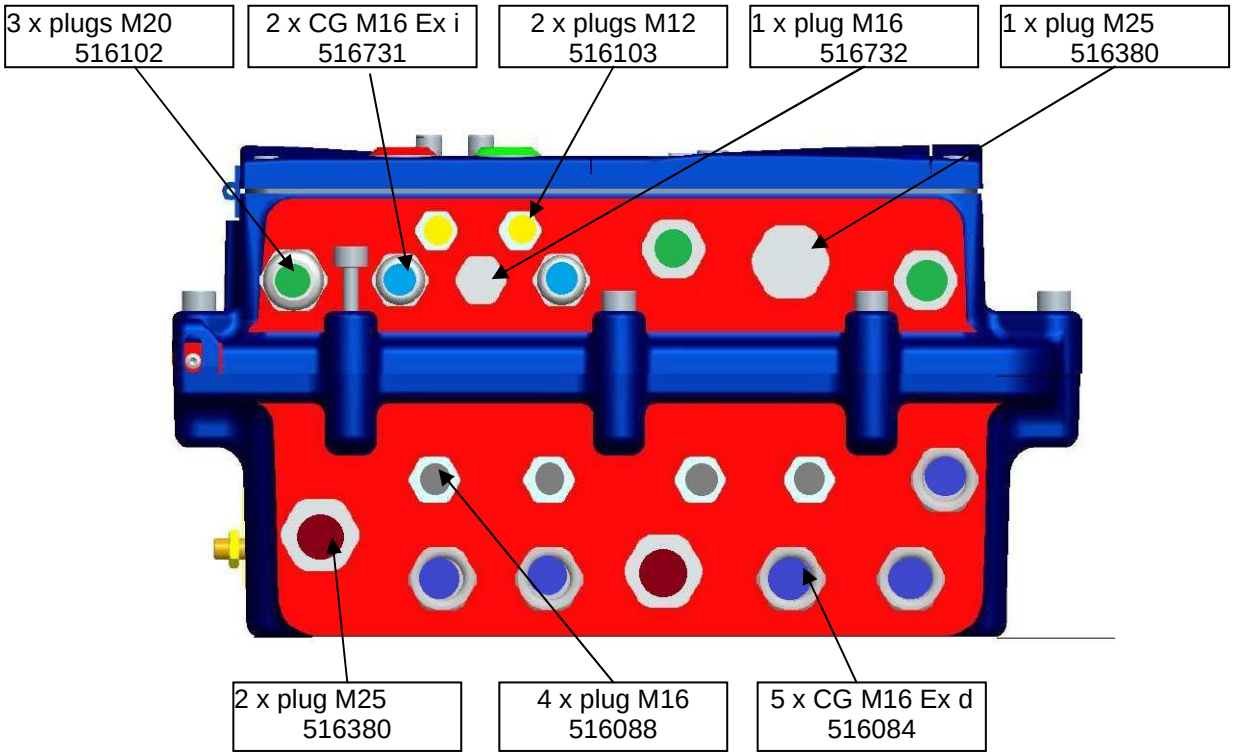

Note: The picture above shows the standard configuration for cable-glands. Depending on the application, the number required will be adapted, unused entries will be plugged.

Cable Gland	Reference	Cable Ø
M12 Ex i	516096	Ø 3 à 6.5
M16 Ex i	516731	Ø 4.5 à 10
M20 Ex i	515319	Ø 6 à 13
M25 Ex i	516020	Ø 10 à 18
M16 Ex d	516084	ext. cable : Ø 8.5 à 16 int. cable : Ø 6 à 12
M25 Ex d	516083	ext. cable : Ø 12 à 21 int. cable : Ø 8.5 à 16

3.4.2 Cables for User Interface Module UI

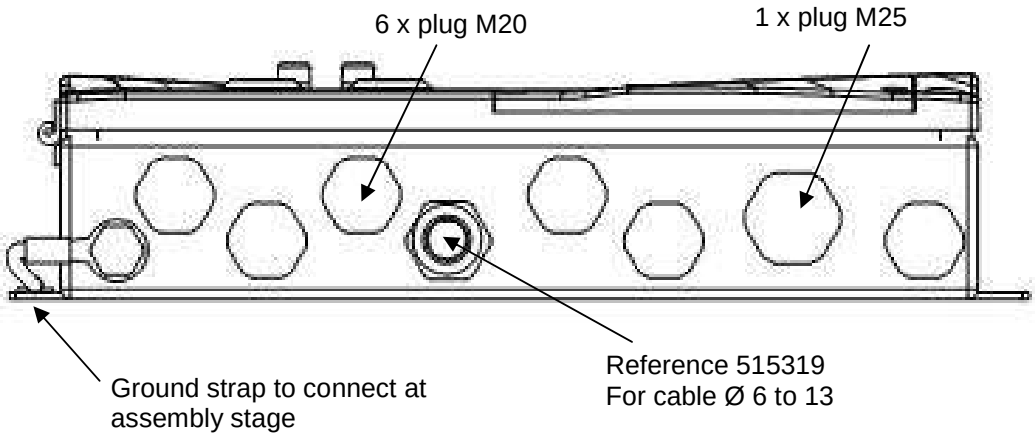

Note: The power and the CAN cable are coming from the associated calculator module.

3.4.3 Carriers

3.4.3.1 User Interface Carrier

The rotating carrier shown hereafter can be supplied (optional).

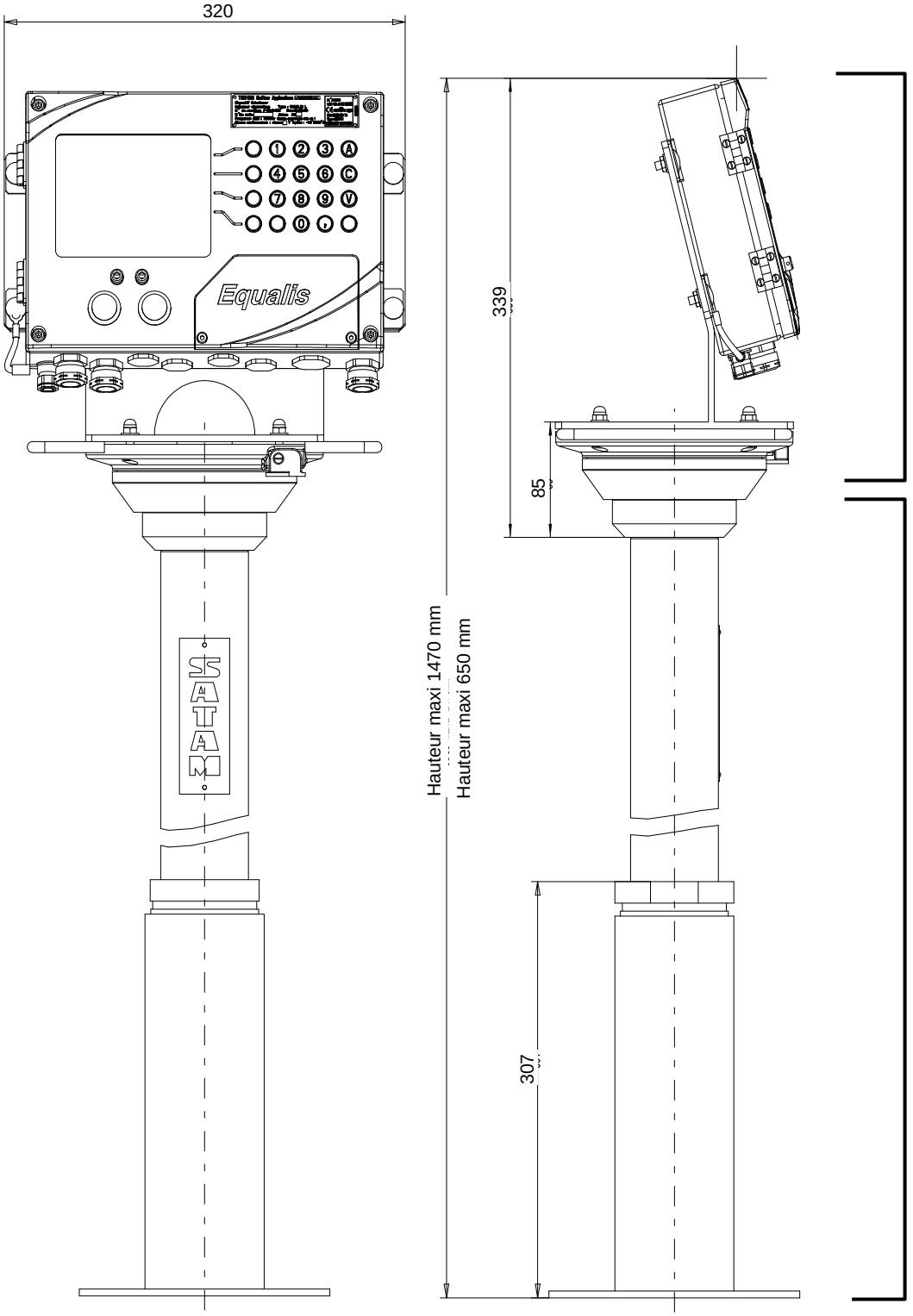

Rotating carrier
Ref. : 516263

Can be adapted on XAB42

High adjustable stand

Ref : 516429

Full assembly : Stand + rotating support - Ref : 516430

3.4.3.2 Adaptation of HM / CM box on ZCE5

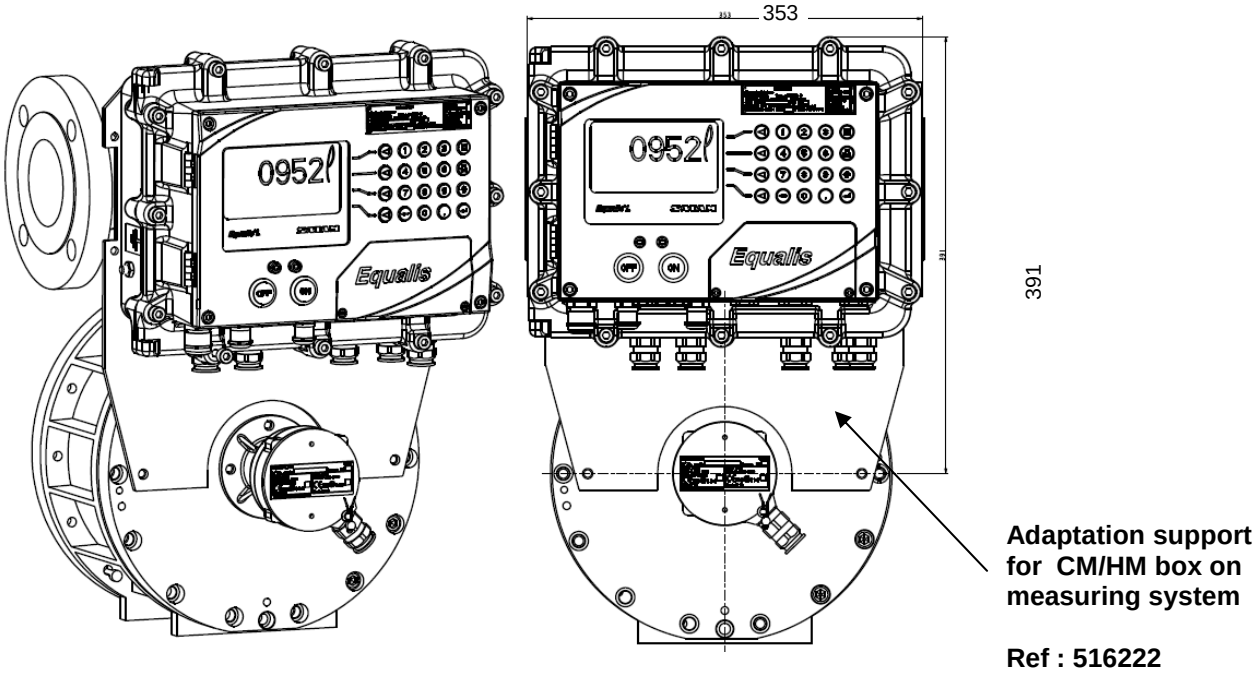

3.4.4 Cable glands

The modules which make up EQUALIS S are equipped with cable glands. They can hold cables with an exterior diameter of up to 16mm. These cable glands are designed to be used with shielded cable braids, so only shielded cables should be connected.

3.4.5 Cable types

The recommended cable types for installing EQUALIS S are as follows:

Cable type no.	Reference	Features
Cable type 2 (from the pulse transmitter to EQUALIS)	511299	Instrumentation cable 3 pairs 0.5mm² flexible multi-strand General screening, using aluminium foil or braiding With or without mechanical reinforcement
Cable type 3 (from T°probe to EQUALIS and computer link)	516393	Instrumentation cable 4 wires 0.5mm² flexible multi-strand Shielded by braiding, with coverage of more than 80%
Cable type 5 - 30V power supply + CAN bus (link with remote CM module)	516457	Cable type SYT2 3 pairs Section AWG20 General screening, with braiding. Mechanical reinforcement
Cable type 6 - AC16 power supply to unit	364772	Power cable 2 wires 1.5mm² Mechanically reinforced
Cable type 7 - from HM to AC16 - Other	906958	Power cable 4 wires + earth 1.5 mm² multi-strand With or without mechanical reinforcement
Cable type 8 - from PM to logical inputs - Other	906955	SI Instrumentation cable 7 pairs 0.5mm² flexible multi-strand General screening, using aluminium foil or braiding With or without mechanical reinforcement

3.4.6 Recommendations

- Each cable must be clearly marked and identifiable.
- Each component must be earthed.
- Each cable must be shielded with braiding, especially the cable connecting the PT100 temperature probe, which must be shielded with a coverage rate greater than 80%.
- Any cable which is at risk of mechanical damage must be enclosed in a protective sheath.

4. Commissioning of EQUALIS S

4.1. Final checks

Once full installation of EQUALIS S and its component parts is complete, perform the following checks:

- Ensure all cables and wires are correctly fitted and connected.
- Ensure there are no loose cables or wires which might come into contact with circuit boards or the mechanics of the units.
- Before closing the EQUALIS S units, check the following:
  → Hydraulic Module:
    - The seal is in place and will not be trapped when the cover is closed.
    - The sheaths around the internal connecting cables will not be trapped when the cover is closed.

  → HM and CM boxes:
    - None of the internal wiring will be trapped when the lid is closed.
- Ensure the housing on all units (EQUALIS, Power supply, transmitter, etc.) is closed correctly.
- Ensure that unused holes are sealed with blanking plugs on all units.

4.2. Tests and start up

The fist start process is the following:

- Switch on the power supply to EQUALIS S. All user interfaces should show the same start up page:

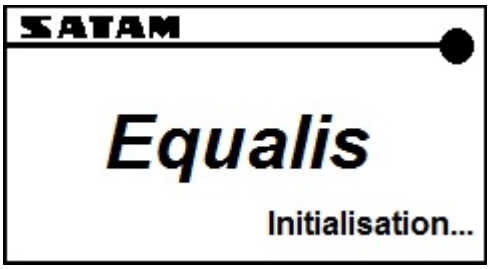

  The 3 dots should be moving, to indicate that the interface is functioning correctly. The main menu will appear once EQUALIS S start up is complete, i.e. when all components of the system have been detected and validated.

- Run the whole EQUALIS configuration and calibration process, to ensure that its settings are correct (see programming manual for configuration of parameters).
- Simulate deliveries without any product spillage, to check that the different functions are operating correctly.
- Run deliveries with the product and check that the whole assembly functions correctly.
- In case of operating problems, consult the error list.
- Check that there are no leaks from the hydraulic system.
- Carry out gauging, to ensure that EQUALIS S is correctly calibrated with all related measurements.
- Once the EQUALIS S electronic indicator is calibrated, seal the whole assembly.

5. Troubleshooting

5.1. Hardware

The most common hardware problems are listed below. For any other problems consult a qualified technician or the SATAM After-Sales Department (sav@satam.eu).

5.1.1 No display

- Check that a 230VAC power supply is being supplied to the EQUALIS S.
- Check that current supplied to the ZCAN V3 card on the HM unit is correct (marked below) and that each intrinsic safety output is supplied with a 7VDC current.

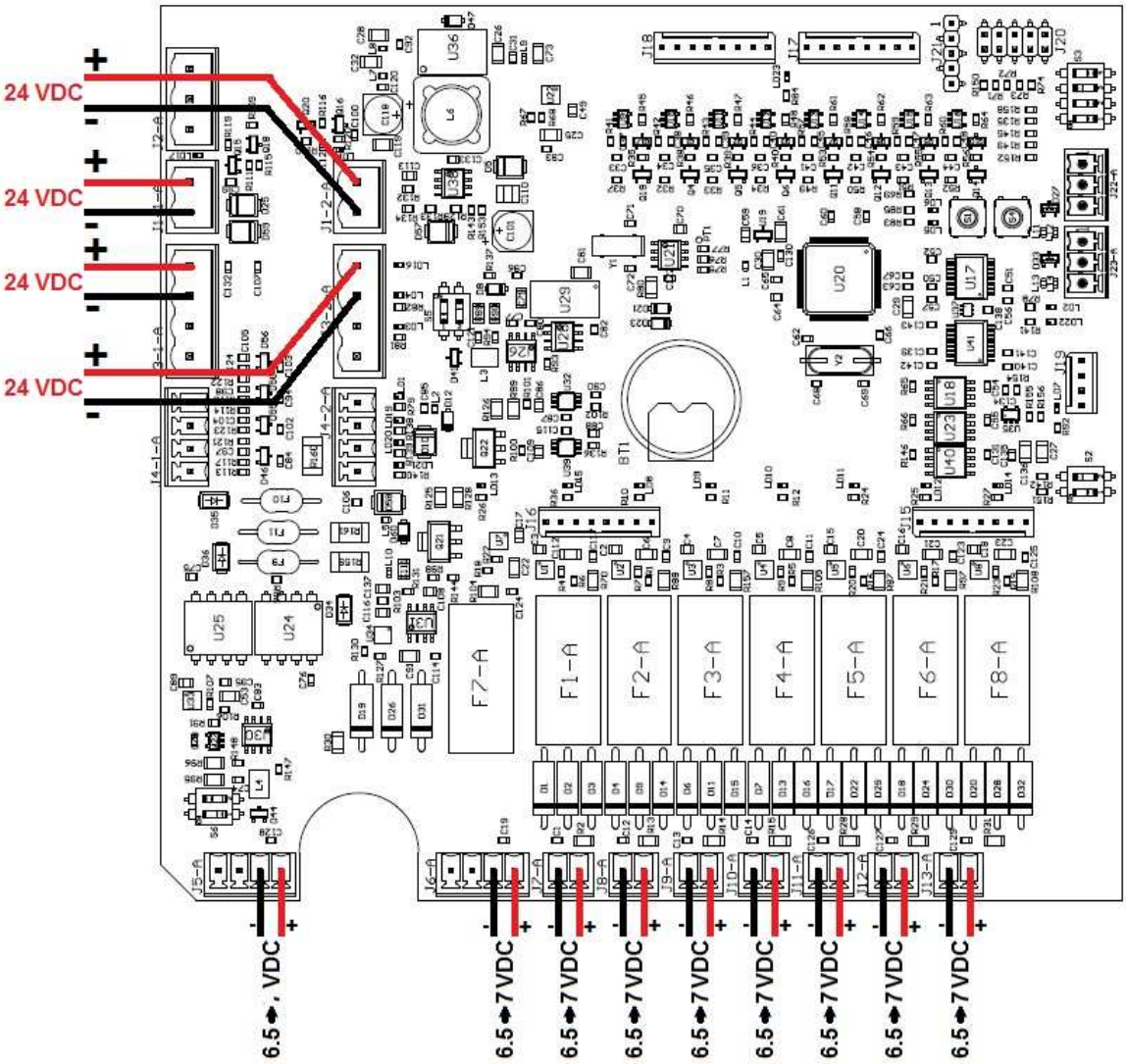

5.1.2 Main menu not displayed

- After the start up phase, if the screen is able to display a page indicating a fault detected which prevents the system from starting up correctly, it will be one of the following:
  → Board missing on the network: in this case, refer to the corresponding paragraph in this manual to check that the missing card is correctly calibrated.
  → Database: integrity of the database detected: Consult a qualified technician.

5.1.3 The Start and Stop buttons or keyboard are not responding

- Check that they are properly connected to the EQUALIS UI card.

5.1.4 Authorisation valve does not open

- Check the wiring.

5.1.5 The product is flowing, but it is not being metered

- Check the wiring of the pulse transmitter and the pin on the drive shaft.
- Check that the transmitter is rotating in the correct direction in relation to its calibration.

5.1.6 Check that the EQUALIS S circuit boards have the correct addresses

There are defined addresses for each transaction module and all the modules linked to it. The addresses for each module will have been pre-defined in the factory settings. However, if the absence of a card is still detected, check its address using the method described below for allocating these addresses.

Module identity					Group identity				
PM	0	0	0	1	0	1	1	0	Group 1
UI	0	0	1	1	0	1	1	0	
UI (optional)	0	1	0	0	0	1	1	0	
HM	0	1	0	1	0	1	1	0	
PM	0	0	0	1	0	1	1	1	Group 2
UI	0	0	1	1	0	1	1	1	
UI (optional)	0	1	0	0	0	1	1	1	
HM	0	1	0	1	0	1	1	1	
PM	0	0	0	1	1	0	0	0	Group 3
UI	0	0	1	1	1	0	0	0	
UI (optional)	0	1	0	0	1	0	0	0	
HM	0	1	0	1	1	0	0	0	
PM	0	0	0	1	1	0	0	1	Group 4
UI	0	0	1	1	1	0	0	1	
UI (optional)	0	1	0	0	1	0	0	1	
HM	0	1	0	1	1	0	0	1	
PM	0	0	0	1	1	0	1	0	Group 5
UI	0	0	1	1	1	0	1	0	
UI (optional)	0	1	0	0	1	0	1	0	
HM	0	1	0	1	1	0	1	0	
PM	0	0	0	1	1	0	1	1	Group 6
UI	0	0	1	1	1	0	1	1	
UI (optional)	0	1	0	0	1	0	1	1	
HM	0	1	0	1	1	0	1	1	
PM	0	0	0	1	1	1	0	0	Group 7
UI	0	0	1	1	1	1	0	0	
UI (optional)	0	1	0	0	1	1	0	0	
HM	0	1	0	1	1	1	0	0	
PM	0	0	0	1	1	1	0	1	Group 8
UI	0	0	1	1	1	1	0	1	
UI (optional)	0	1	0	0	1	1	0	1	
HM	0	1	0	1	1	1	0	1	

The addresses are programmed in two sections:

- One section identifies the module
- The other section describes the measurement group reference, i.e. the loading arm.

Example: Programming of the address for the PM module in the group 1:
Each circuit board communicating via the CAN bus is equipped with a switch block:

PM	0	0	0	1	0	1	1	0	Group 1

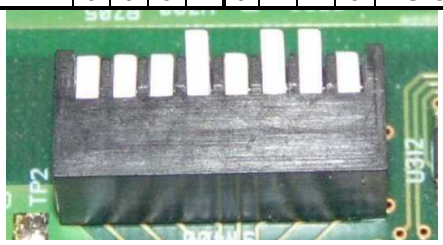

Switch block on PM card, group No.1

- **0 = Key held down**
- **1 = Key released**

5.2. Errors

EQUALIS S has several systems for detecting errors. These can be divided up as follows:

- Errors displayed on the delivery page
- Other errors to be found in the error database

5.2.1 Delivery page errors

These errors are described in the following table:

Message	Description	Action	Correction
HM DISCONNECTED	Message appears when the link with the HM card is down.	After detection that the HM is disconnected, the delivery is stopped and closed.	Check the communication bus wiring between these HM and the PM cards.
PM RAM ERROR	Message transmitted by the PM card after metrological checks.	The preparation of the delivery is abandoned.	Internal problem: change the card.
DUAL METER PM. ERROR	Message transmitted by the PM card whilst checking the delivery calculations.	Delivery is stopped.	Internal problem: change the card.
COM. ERROR DISPLAY	No communication between PM card and UI	Delivery is stopped.	Check the CAN network wiring between these two cards.
LRC DISPLAY ERROR	Checksum error in communication between PM card and the UI	Delivery is stopped.	Contact SATAM technical support.
TRANS. 1(2) DISCONNECTED	The transmitter 1 (2) has not been detected.	This error is detected at delivery preparation stage: this one is abandoned.	Check the links and the wiring of the transmitter concerned.
PULSE1(2) TRANS. REAR	The transmitter 1 (2) in the opposite direction to that of the flow, beyond the usual number of pulses authorised.	Delivery is stopped.	Check the cause in the hydraulic system, and, if possible, increase the corresponding parameters.
PULSE1(2) TRANS. AUTHORISED	Sequence error between the two pulse channels.	Delivery is stopped.	Check the transmitter's wiring and check that the different connectors are tightened.
UNAUTHORISED MEASUREMENT	When no delivery is being performed, a number of pulses have been detected from the transmitter, which exceeds the authorised limit, setting off an unauthorised measurement procedure.	Delivery unauthorized metering is automatically engaged. It will be ended if the pulses disappear after 2 minutes.	Repair the detected product leak.
MAX. FLOW EXCEEDED	The maximum authorised flow rate has been exceeded	Delivery is stopped.	Check the hydraulic installation, and if necessary increase the max. flow parameter.
BELOW MIN. FLOW	The minimum authorised flow rate has not been attained for within the set time-out period	Delivery is stopped.	Check the hydraulic installation and correct flow value. If necessary, adjust min. flow value.
PT100 DISCONNECTED	The PT100 probe is no longer detected by EQUALIS.	This error is detected at delivery preparation stage : this one is abandoned.	Check the wiring.
TIME DEFECT ZERO FLOW	The authorisation valve has been activated and no flow has been detected before the time-out period has elapsed.	Delivery is stopped.	Check power supply and wiring of authorisation valves.
END OF DELIVERY TIME	The delivery has taken longer than the maximum authorised time, causing the loading operation in progress to be terminated	-	-
END OF AUTHORISED TIME	The time taken to prepare the delivery has exceeded 20min.: preparation has been cancelled.	-	-
DATABASE THRESHOLD	The number of transactions stored in the database has reached the first warning threshold. It is still possible to carry out transactions.	A warning message is displayed at every delivery preparation. Delivery is still authorized.	Memory space may be freed up as described in the programming manual.
DATABASE FULL	The number of transactions stored in the database is at full capacity. It is no longer possible to begin loading deliveries.	The preparation is not possible. Memory space must be released to allow new deliveries.	Memory space may be freed up as described in the programming manual.

5.2.2 Errors which may be consulted in the database

EQUALIS S has a database in which all errors are recorded. These may be consulted subsequently via the following menu:

How to access the Error log: See programming manual U 517504 (Depot version) and U517505 (Truck version)
These logs can be accessed via the following menus:

ADMINISTRATION → INSPECTION → ERROR LOG

The window displayed will look like this:

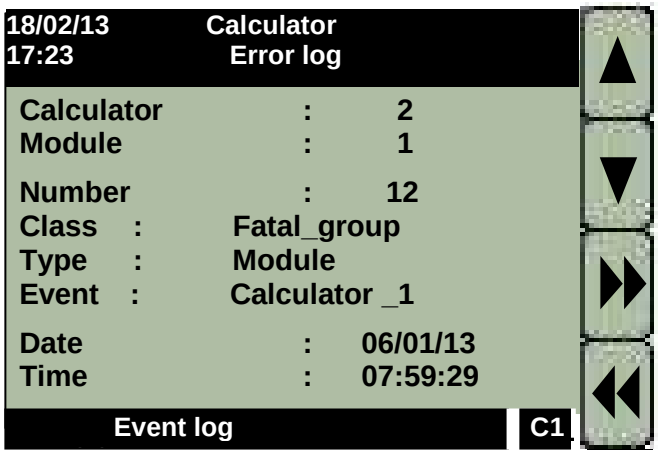

These results are included to enable a qualified technician to perform a more in-depth analysis of the problem detected.

6. EQUALIS S wiring

6.1. HM relays board wiring

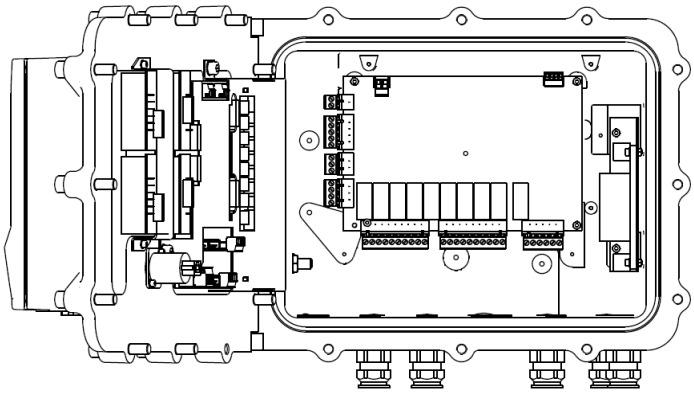

Configuration with 1 HM board

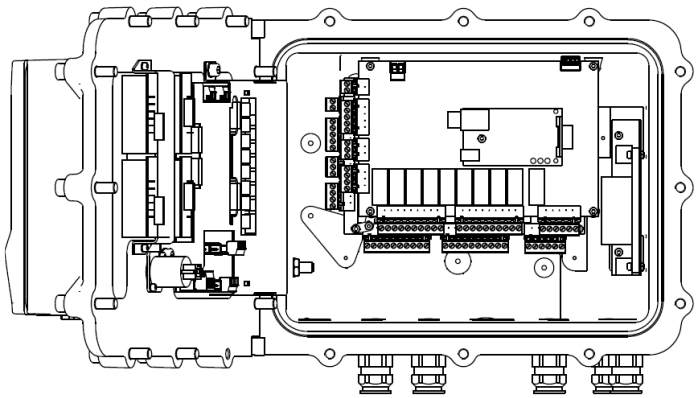

Configuration with 2 HM boards

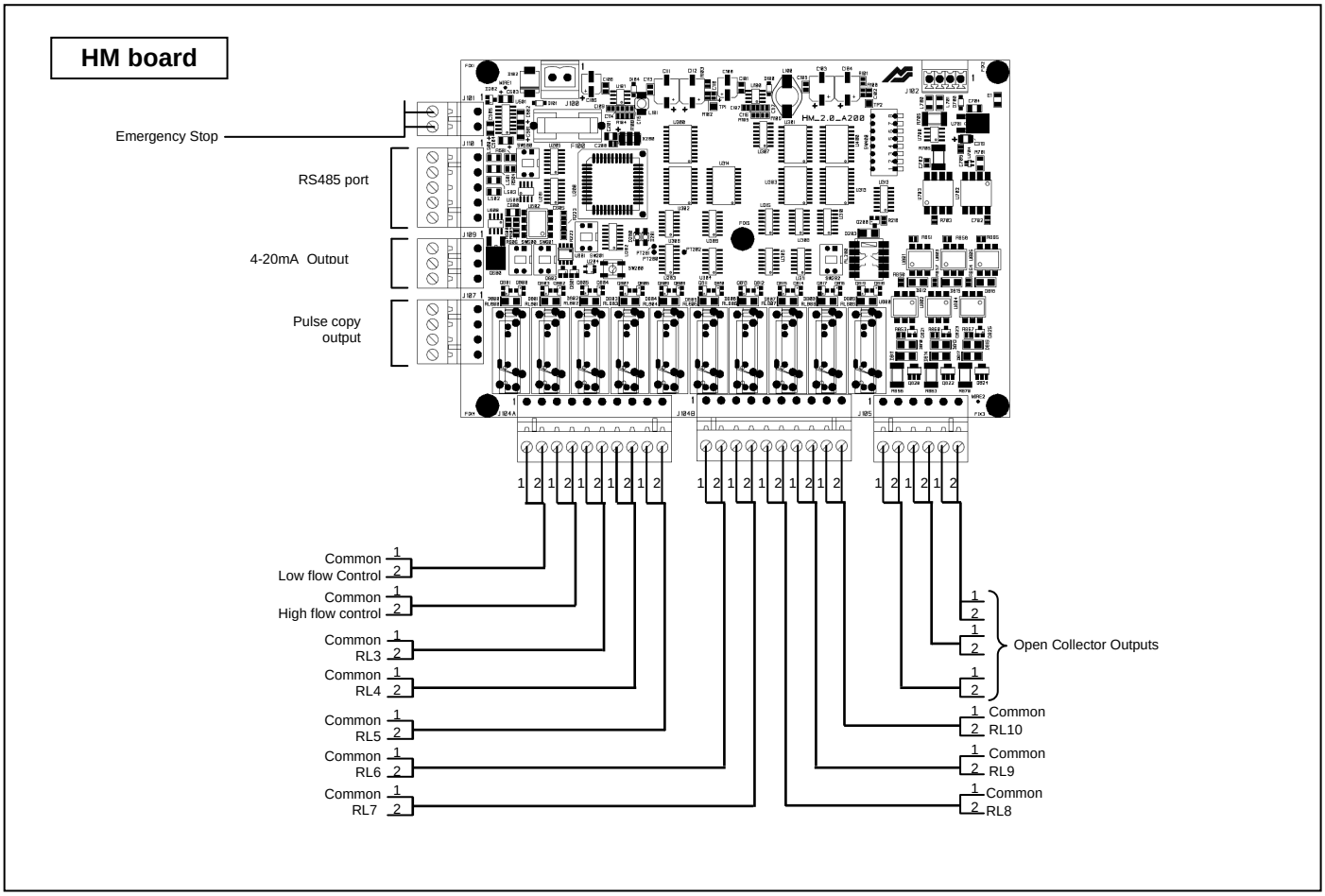

6.2. ZCAN V3 board wiring

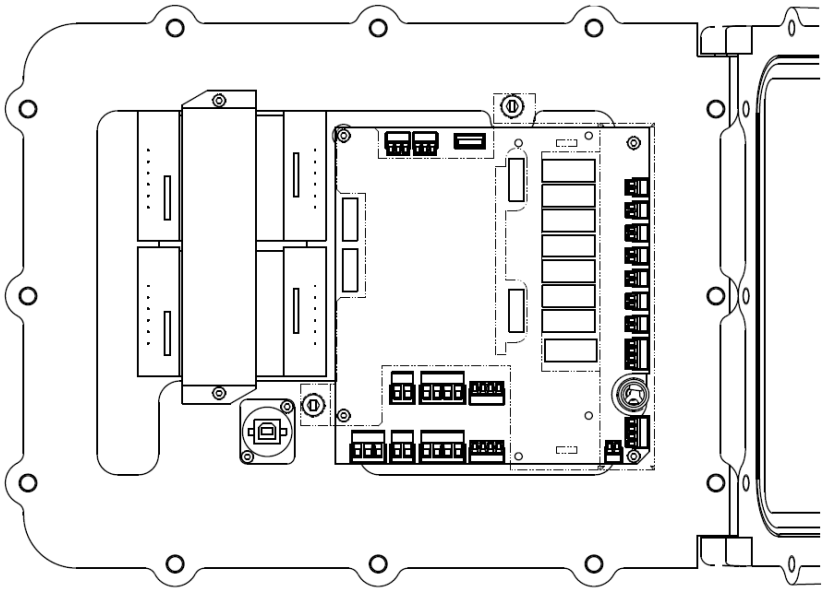

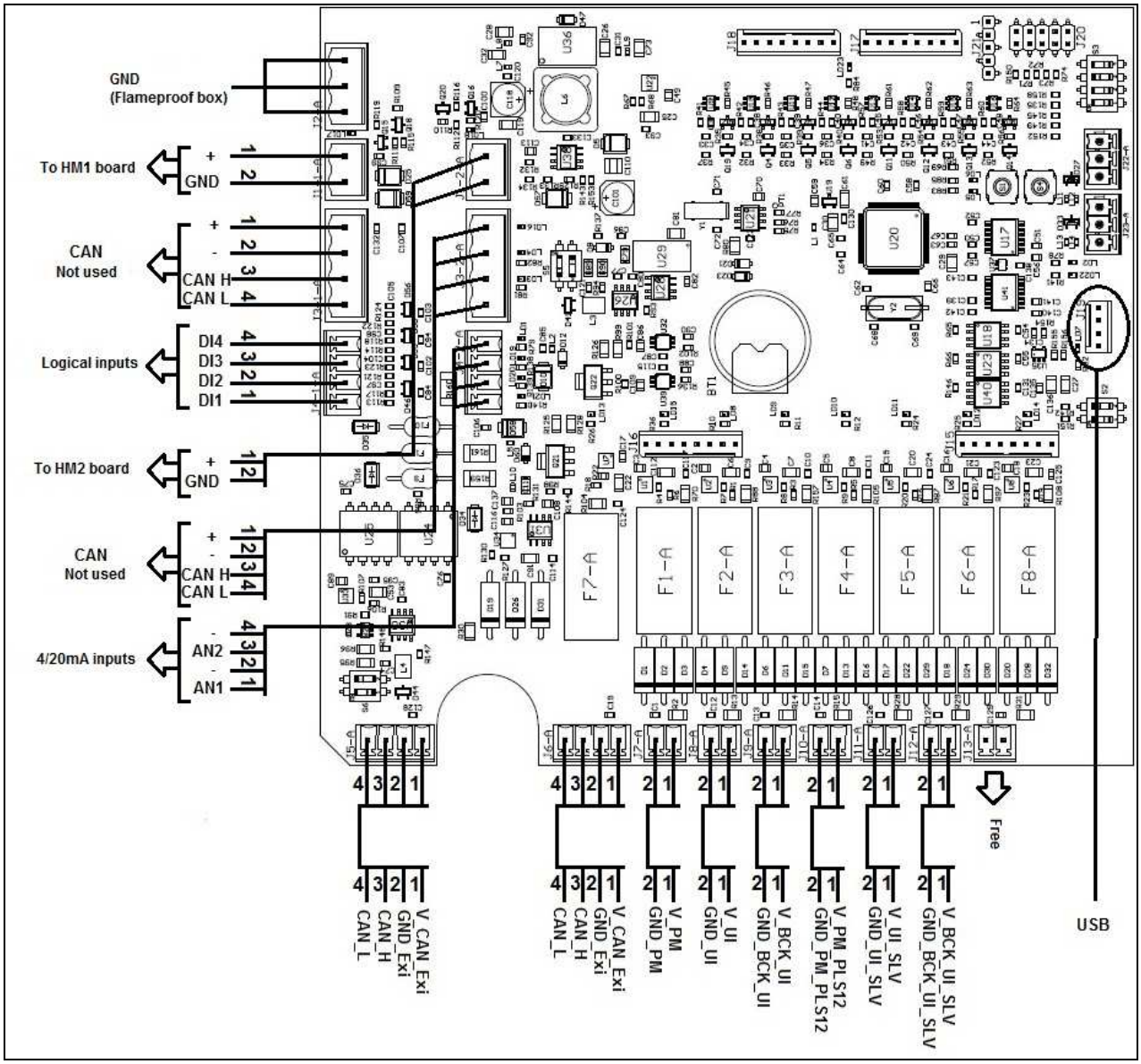

6.3. CM Calculator Module wiring: PM / UI boards

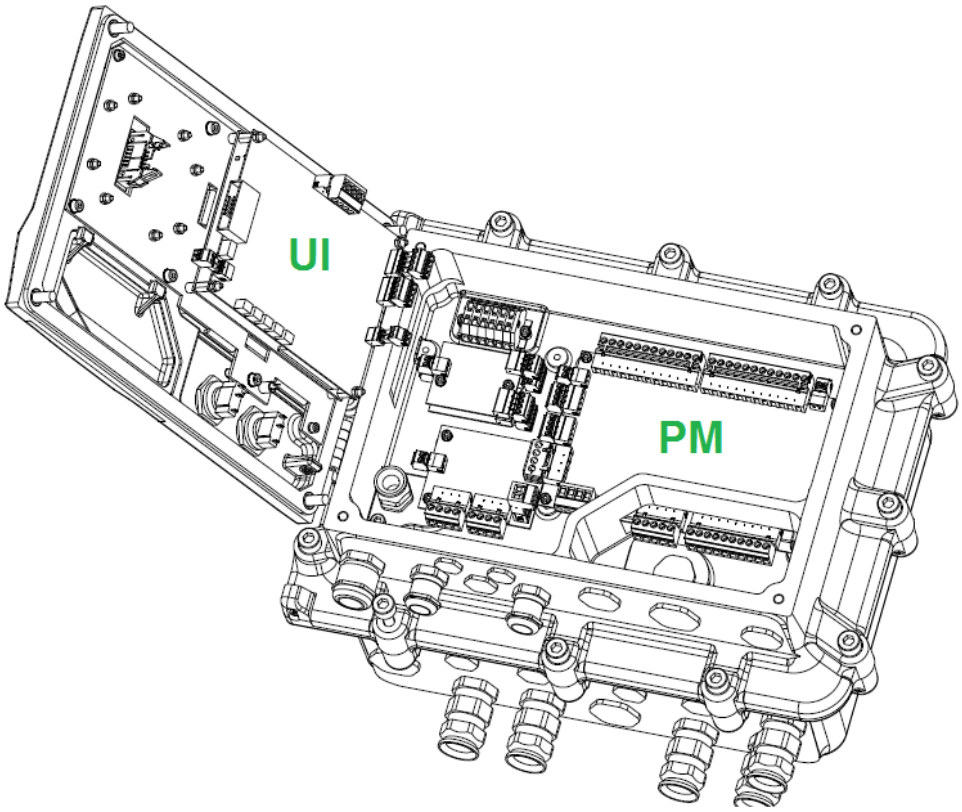

6.3.1 PM board

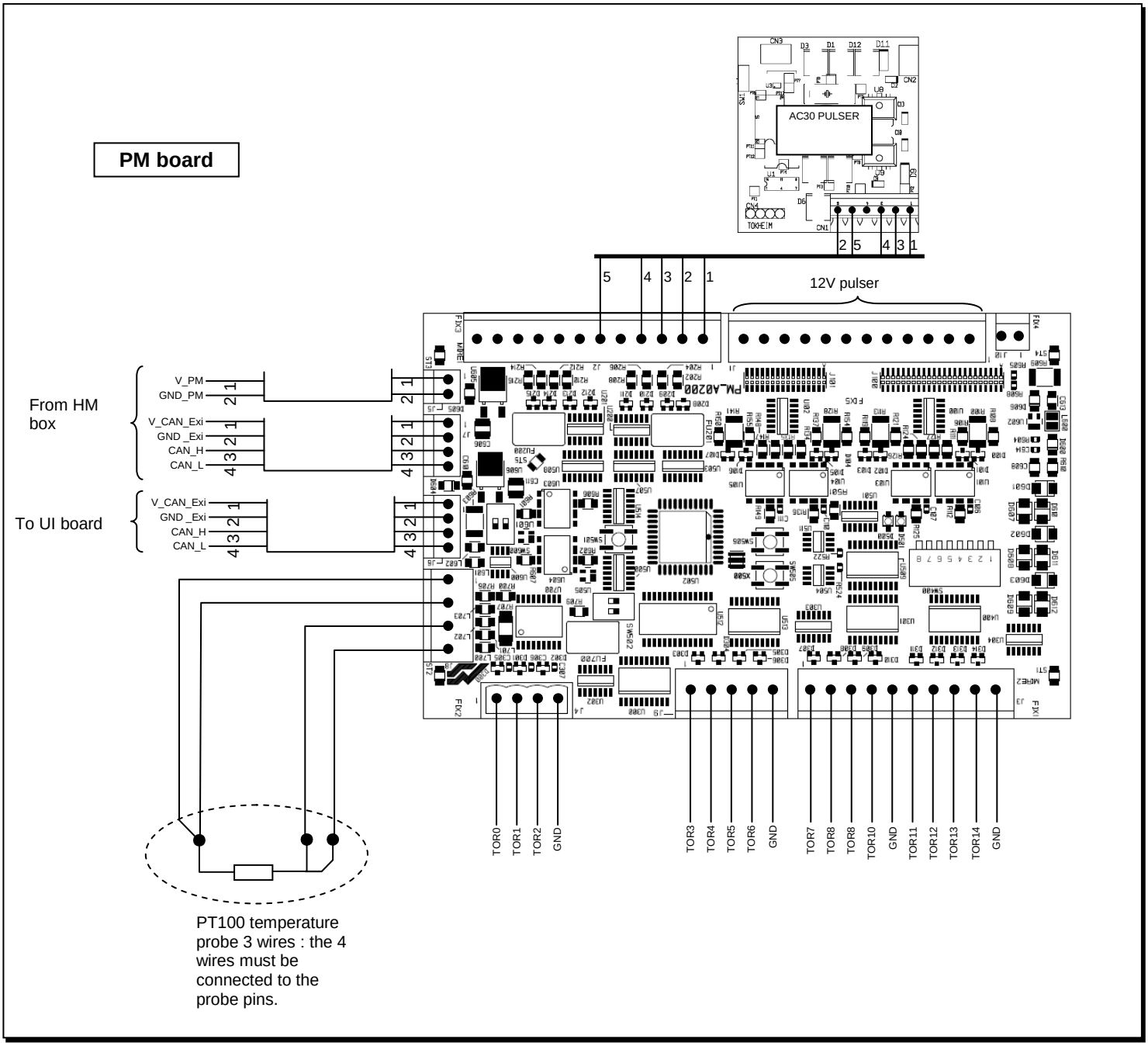
PM board
AC30 PULSER
TOX-EIM
2 5 4 3 1
5 4 3 2 1
12V pulser
From HM box
V_PM
GND_PM
V_CAN_Exi
GND _Exi
CAN_H
CAN_L
To UI board
V_CAN_Exi
GND _Exi
CAN_H
CAN_L
TOR0
TOR1
TOR2
GND
TOR3
TOR4
TOR5
TOR6
GND
TOR7
TOR8
TOR8
TOR10
GND
TOR11
TOR12
TOR13
TOR14
GND
PT100 temperature probe 3 wires : the 4 wires must be connected to the probe pins.

6.3.2 UI board

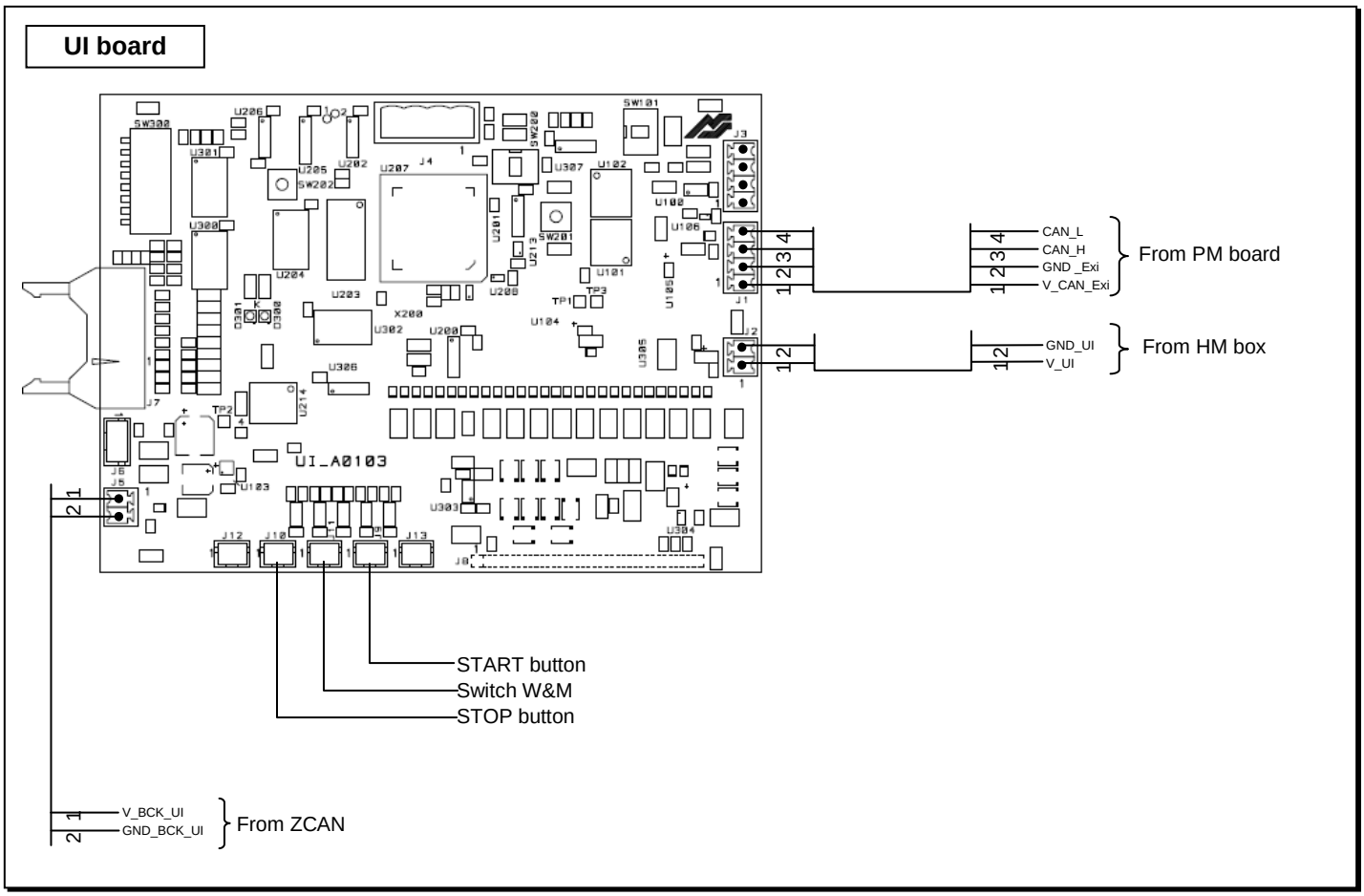
UI board
UI_A0103
CAN_L
CAN_H
GND _Exi
V_CAN_Exi
From PM board
GND_UI
V_UI
From HM box
START button
Switch W&M
STOP button
V_BCK_UI
GND_BCK_UI
From ZCAN

6.4. Pulse transmitter wiring

6.4.1 AC30 SATAM pulse transmitter - ref. 516038

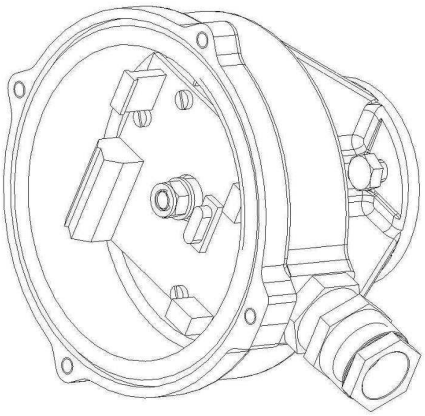

Cable gland
Réf. 515934 PG11
Cable Ø 8 to 10 mm

Wiring of the AC30 board: See § 6.3.1

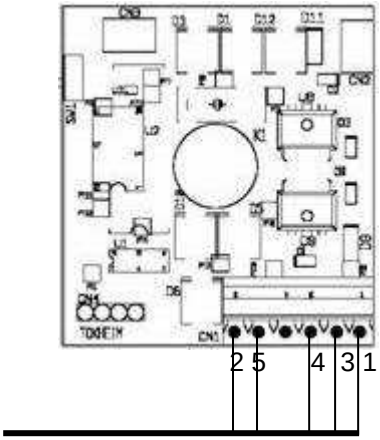

6.5. Printer wiring

The EPSON TMU-295 printer is directly linked to the EQUALIS S calculator, via the standard connection cable for this printer.

Power supply:
- Input voltage : 24Vdc
- Stability : + /- 5%

To connect this printer to the mains power supply, an adaptor must be used, (ref. 514567).

6.6. Wiring diagrams

Drawing 517434: General wiring diagram for standard version (source version or compact version)
Drawing 517617: General wiring diagram for dome version

These drawings are available on request, in addition to this installation manual, as well as any other drawing corresponding to specific applications.